士林電機
Shihlin Electric

CP301 Instruction Manual

V 1.01

2022-05-31

Content

1. CANOPEN OVERVIEW 1

1.1 CANOPEN PROTOCOL 1

1.2 CANOPEN FEATURES OF SHIHLIN INVERTER SA3 2

1.3 CANOPEN COMMUNICATION PROTOCOL 3

2. CANOPEN COMMUNICATION INTERFACE DESCRIPTIONS 1

2.1 CONTROL MODE SELECT DSP402 STANDARD 1

3. CANOPEN SUPPORTING INDEX 10

4. CANOPEN FAULT CODE 15

1. CANopen Overview

1.1 CANopen protocol

- The built-in CANopen function is a kind of remote control. Master can control the inverter by using CANopen protocol.
- CANopen is a CAN-based higher layer protocol, and was designed for motion-oriented machine control networks.

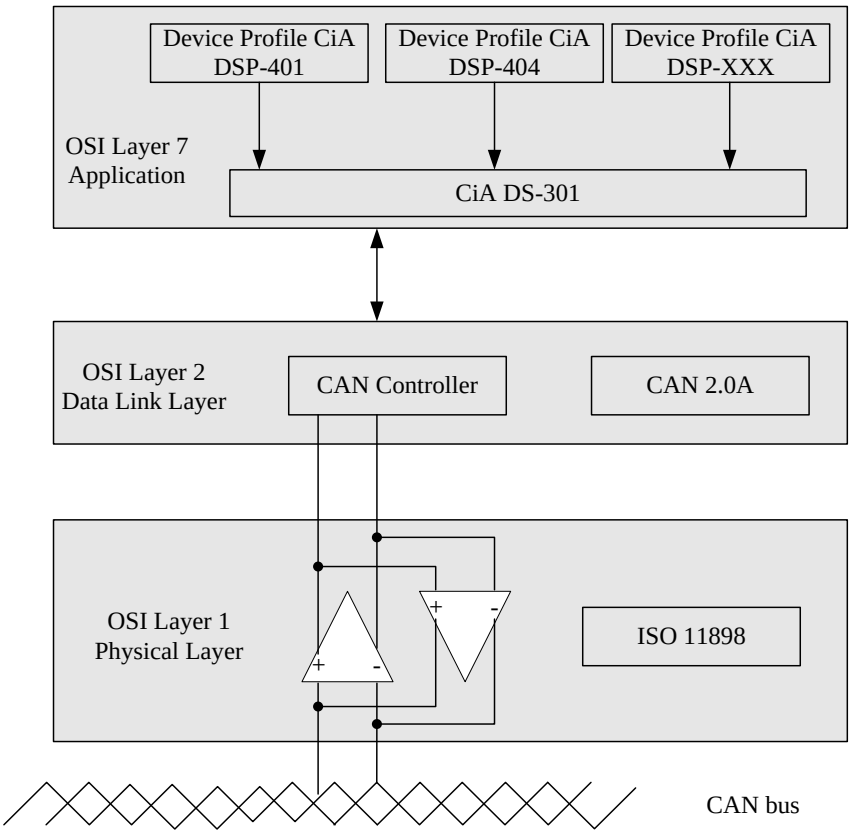

1.2 CANopen features of Shihlin Inverter SA3

- Communication features

  SA3 communication features are based on:

  1. CAN2.0A protocol
  2. CANopen DS301 V4.02

Simplified format for message:

ID(11 bits)	User data(the maximum length 8 bits)							
COB-ID	0 bit	1 bit	2 bits	3 bits	4 bits	5 bits	6 bits	7 bits

Please refer to CAN In Automation website: http://www.can-cia.org for more information.

- Function

  SA3 function feature conform to: Inverter and motion-oriented machine feature (DSP-402 V2.0, speed mode)

- Support service
  1. Support four groups PDO(Process Data Objects) PDO1~PDO4
  2. Support SDO (Service Data Objects), SDO message is used in configuration and setting, mainly to visit the Object Dictionary of each node.
  3. NMT service (Network Management)
  4. Boot-up message
  5. Heartbeat object
  6. Emergency service
- Not supporting service:

  Time Stamp service

1.3 CANopen communication protocol

- Connection set predefined

- ID: The ID of CANopen message consists of 11 bits, which is also called COB-ID (Communication Object Identifier). The COB-ID definition of 11-bit each group is as follows:

COB Identifier (CAN Identifier)										
10	9	8	7	6	5	4	3	2	1	0
Function Code				Node-ID						

- In order to simplify network configuration, CANopen predefined some basic ID configuration.

Item	Function Code	Node No	COB-ID	Object Dictionary Index
Broadcast Message				
NMT	0000	-	0	-
SYNC	0001	-	80H	1005H,1006H,1007H
TIME STAMP	0010	-	100H	1012H,1013H
Point-to-point Message				
Emergency	0001	1-127	81H-FFH	1014H,1015H
TPDO1	0011	1-127	181H-1FFH	1800H
RPDO1	0100	1-127	201H-27FH	1400H
TPDO2	0101	1-127	281H-2FFH	1801H
RPDO2	0110	1-127	301H-37FH	1401H
TPDO3	0111	1-127	381H-3FFH	1802H
RPDO3	1000	1-127	401H-47FH	1402H
TPDO4	1001	1-127	481H-4FFH	1803H
RPDO4	1010	1-127	501H-57FH	1403H
Transmit SDO	1011	1-127	581H-5FFH	1200H
Receive SDO	1100	1-127	601H-67FH	1200H
Heartbeat	1110	1-127	701H-77FH	1016H,1017H

- CANopen communication protocol supporting services:
  1. NMT(Network Management Object)
  2. SDO(Service Data Objects)
  3. PDO(Process Data Object)
  4. EMCY(Emergency Object)

- NMT (Network Management Object)

The Network Management (NMT) follows a Master/Slave structure for executing NMT service. Only one NMT master is in a network, and other nodes are regarded as slaves. All CANopen nodes have a present NMT state, and NMT master can control the state of the slave nodes. The state diagram of a node is shown as follows:

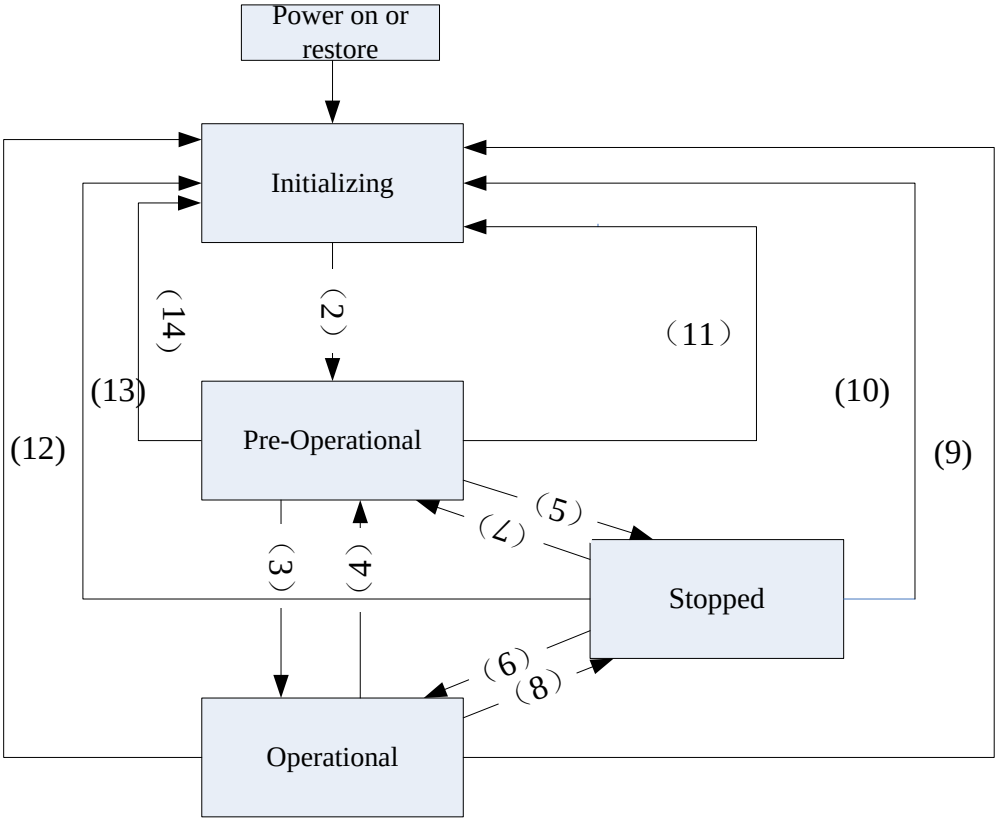

Transformation	Description
(1)	After power is applied, protocol stack is auto in initialization state
(2)	Enter pre-operational state automatically after initializing.
(3)(6)	Start_Remote_Node command
(4)(7)	Enter_PRE-OPERATIONAL_State command
(5)(8)	Stop_Remote_Node command
(9)(10)(11)	Reset_Node command
(12)(13)(14)	Reset_Communication command

The following services can be accessed according to the inverter communication state:

	Initializing	Pre-Operational	Operational	Stopped
PDO			√	
SDO		√	√	
SYNC		√	√	
EMCY		√	√	
Boot-up	√			
NMT		√	√	√

Frame description: Client→Inverter

COB-ID	0 Byte	1 Byte
0 (16#000)	Command Specifier (CS)	Node ID (1)

(1) If node ID is 0, Command Specifier will be broadcast to all CANopen slaves (including SA3); each slave should carry out the NMT command, in which the corresponding transformation is as follows:

Command Specifier (CS)	Meaning
1(16#01)	Start_Remote_Node
2(16#02)	Stop_Remote_Node
128(16#80)	Enter_PRE-OPERATIONAL_State
129(16#81)	Reset_Node
130(16#82)	Reset_Communication

◆ SDO (Service Data Objects)

SDO is used to access the Object Dictionary in every CANopen node by Client/Server model. One SDO has two COB-ID (request SDO and response SDO) to upload or download data between two nodes. No data limit for SDOs to transfer data. But it needs to transfer by segment when data exceeds 4 bytes with an end signal in the last segment.

The Object Dictionary (OD) is a group of objects in CANopen node. Every node has an OD in the system, and OD contains all parameters describing the device and its network behavior. The access path of OD is the index and sub-index, each object has a unique index in OD, and has sub-index if necessary. The request and response frame structure of SDO communication is shown as follows:

Request: Client→Inverter

COB-ID	0 Byte	1 Byte	2 Bytes	3 Bytes	4 Bytes	5 Bytes	6 Bytes	7 Bytes
1536 (16#600) +Node-ID	Request Code	Object Index		Object Sub-index	Request Data			
		LSB	MSB		Bit 7-0	Bit 15-8	Bit 23-16	Bit 31-24

Response: Client←Inverter

COB-ID	0 Byte	1 Byte	2 Bytes	3 Bytes	4 Bytes	5 Bytes	6 Bytes	7 Bytes
1408 (16#580) +Node-ID	Response Code	Object Index		Object Sub-index	Response Data			
		LSB	MSB		Bit 7-0	Bit 15-8	Bit 23-16	Bit 31-24

According to the difference between Request Code and Response Code, Request Data and Response Data may change, shown as the following table:

Request Code	Command Description
16#23	Write a 4-byte data
16#2B	Write a 2-byte data
16#2F	Write a 1-byte data
16#40	Read data
16#80	Stop the current SDO command

Response Code	Command Description
16#43	Read data: 4-byte data
16#4B	Read data: 2-byte data
16#4F	Read data: 1-byte data
16#60	Write a 1/2/4-byte data: Response
16#80	Error response: Give up the feedback code

◆ PDO (Process Data Object)

PDO communication can be described by the producer/consumer model. Each node of the network will listen to the messages of the transmission node and distinguish if the message has to be processed or not after receiving the message. PDO can be transmitted from one device to one another device or to many other devices. Every PDO has two PDO services: a TxPDO and an RxPDO. PDOs are transmitted in a non-confirmed mode. PDO Transmission type is defined in the PDO communication parameter index (1400h for the 1st RxPDO or 1800h for the 1st TxPDO), and all transmission types are listed in the following table:

Type Number	PDO transmissions type				
	Cyclic	Acyclic	Synchronous	Asynchronous	RTR
0		√	√		
1-240	√		√		
241-251	Reserved				
252			√		√
253				√	√
254				√	
255				√	

Type No.1-240 indicates the number of SYNC message between two PDO transmissions.

Type No.252 indicates the data is updated immediately after receiving SYNC message.

Type No.253 indicates the data is updated immediately after receiving RTR message.

Type No.254, 255 indicates the data is asynchronous transmission.

All PDO transmission data must be mapped to index via Object Dictionary. Shown as the following example:

Master transfer PDO message to Slave:

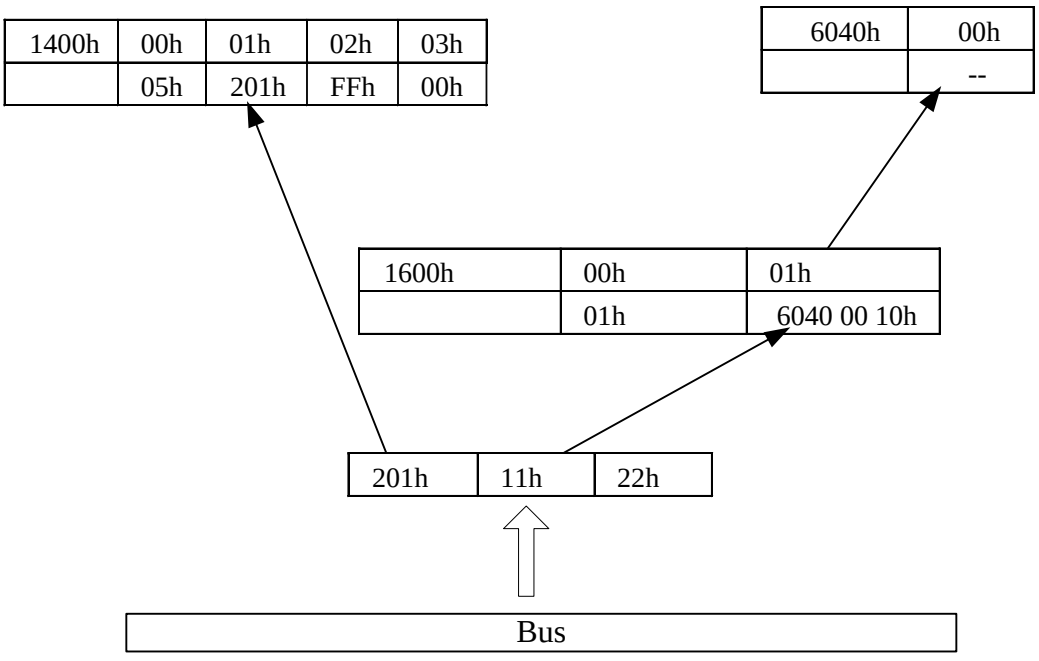

Slave feedback message to Master:

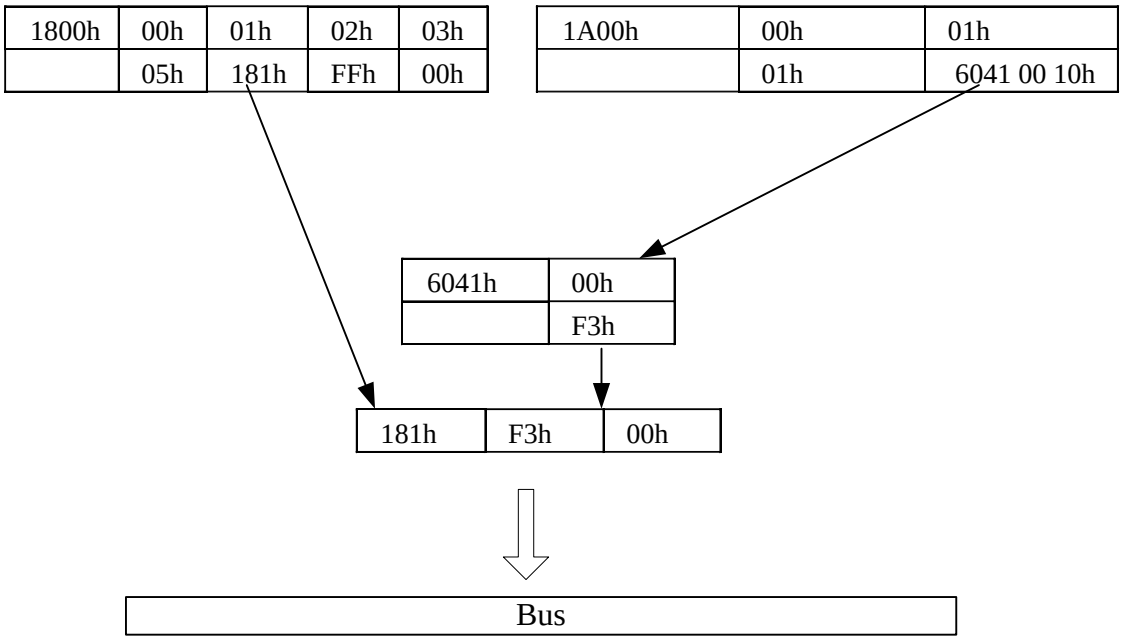

◆ EMCY (Emergency Object)

When errors occurred inside the hardware, an emergency object will be triggered an emergency object will only be sent when an error is occurred. As long as there is nothing wrong with the hardware, there will be no emergency object to be served as a warning of an error message. Emergency object is a data format of 8-byte, the frame format is shown as the follows:

COB-ID	0	1	2	3	4	5	6	7
128 (16#080) +Node-ID	Emergency Error Code		Error register (Object 1001H)	Manufacturer specific Error Field				

For emergency object message definition of SA3 type, please refer to CANopen error code.

2. CANopen Communication Interface Descriptions

2.1 Control mode select DSP402 standard

- If you want to use CANopen to control the inverter, please follow the steps below:
  1. Wiring
  2. CANopen station setting: Set P.800 (Range of setting is 1-127. When P.800=0, CANopen slave function is disabled.)
  3. CANopen baud rate setting: Set P.801 (CANBUS Baud Rate: 1M(0), 500K(1), 250K(2), 125K(3), 100K(4) and 50K(5)).
  4. Switch the inverter mode (Operation Enable, via NMT word string). Switch process is via bit0 ~bit3 and bit7 in Control word 0x6040) and Status Word 0x6041.

  Example as follows:

  1) Set Index 6040H = 06H, 6040H = 07H, 6040H = 0FH and switch to “Operation Enable” state.
  2) Set Index 6040H = 7FH, the inverter should be in forward rotation.
  3) Set Index 6042H = 1500 (rpm), if the inverter's pole number is 4, then the inverter's operation frequency is 50Hz, and the pole number setting is P.303/ P.333.

  Note 1: The set value of Index 6042h is rotation speed RPM. Please refer to the formula below.

$$n = f \times \frac{120}{P}$$ (n: Rotation Speed RPM, P: Pole, f: Operating frequency)

Switch flow shown as the follows:

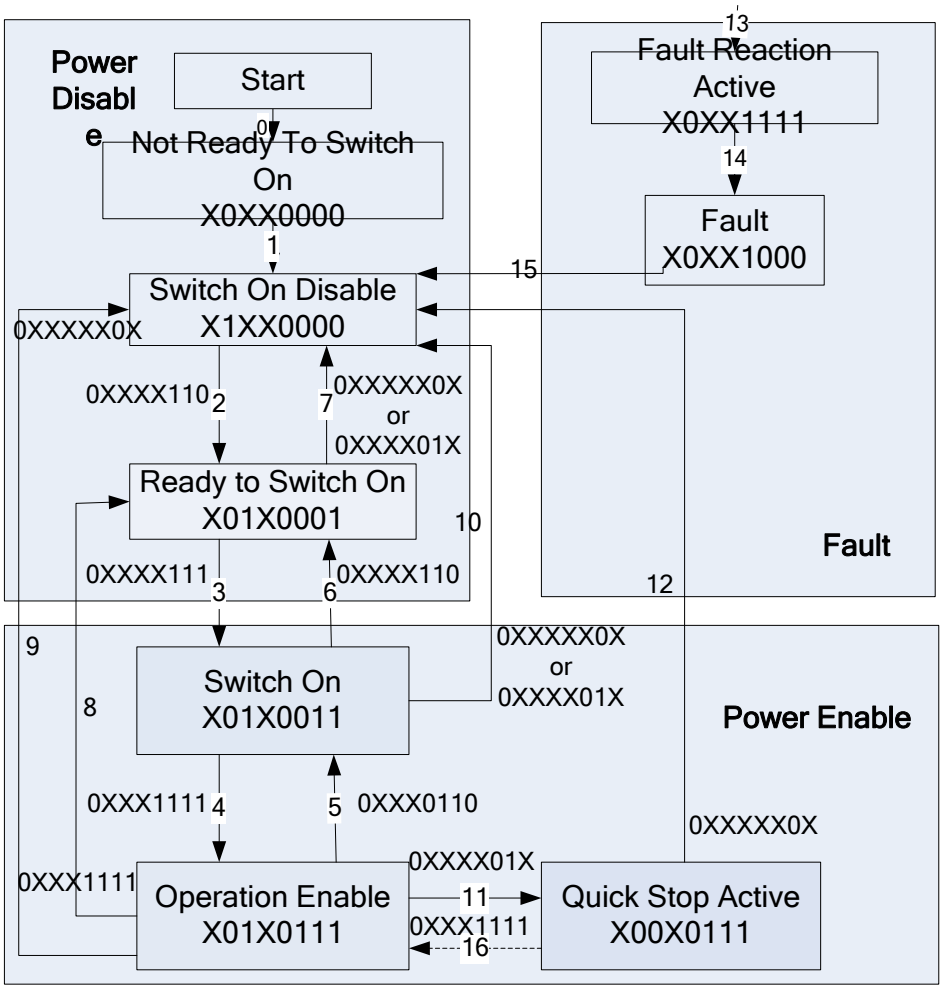

5. The operation is according to DS402 motion control standard. The operation of inverter is decided by bit 4 ~bit6 in Control word 0x6040. It is defined as below:

bit6	bit5	bit4	Result
1	1	1	Operate to target frequency
1	0	1	Latch current frequency
Others			Decelerate to 0Hz

6. Refer to the above, for bit 0 ~ bit 6 in status word 6041H, please refer to the status switch flow chart. The bit 7 is defined as warn and the bit 10 means the frequency has reached.

3. CANopen Supporting Index

➢ SA3 supporting basic index:

Index	Sub	Definition	Initial value	R/W	Size	Note
1000H	0	Device type	0	R	U32	
1001H	0	Error register	0	R	U8	
1005H	0	COB-ID SYNC message	80H	R	U32	
1008H	0	Manufacturer device name	0	R	U32	
1009H	0	Manufacturer hardware version	0	R	U32	
100AH	0	Manufacturer software version	0	R	U32	
1010H	0	Store Parameter	3	R	U8	
	1	Save all parameters	0	RW	U32	
	2	Save communication parameter	0	RW	U32	
	3	Save application parameters	0	RW	U32	
1011H	0	Restore Parameter	3	R	U8	
	1	Restore all parameters	0	RW	U32	
	2	Restore communication parameter	0	RW	U32	
	3	Restore application default parameters	0	RW	U32	
1014H	0	COB-ID emergency	0000080H+Node-ID	R	U32	
1016H	0	Consumer heartbeat time	1	R	U8	
	1	Consumer 1	0	RW	U32	Unit: 1ms
1017H	0	Producer heartbeat time	0	RW	U16	Unit: 1ms
1018H	0	Number	3	R	U8	
	1	Vender ID	0	R	U32	
	2	Product code	0	R	U32	
	3	Revision	0	R	U32	
1200H	0	Server SDO Parameter	2	R	U8	
	1	COB-ID Client -> Server	0000600H+Node-ID	R	U32	
	2	COB-ID Client <- Server	0000580H+Node-ID	R	U32	
1400H	0	Number	2	R	U8	
	1	COB-ID used by RXPDO	00000200H+NodeID	RW	U32	
	2	Transmission Type	5	RW	U8	01-240:Cyclic&Synchronous 254: Asynchronous 255: Asynchronous

Index	Sub	Definition	Initial value	R/W	Size	Note
1401H	0	Number	2	R	U8	
	1	COB-ID used by RXPDO	80000300H+NodeID	RW	U32	
	2	Transmission Type	5	RW	U8	01-240:Cyclic & Synchronous
						254: Asynchronous
						255: Asynchronous
1402H	0	Number	2	R	U8	
	1	COB-ID used by RXPDO	80000400H+NodeID	RW	U32	
	2	Transmission Type	5	RW	U8	01-240:Cyclic & Synchronous
						254: Asynchronous
						255: Asynchronous
1403H	0	Number	2	R	U8	
	1	COB-ID used by RXPDO	80000500H+NodeID	RW	U32	
	2	Transmission Type	5	RW	U8	01-240:Cyclic & Synchronous
						254: Asynchronous
						255: Asynchronous
1600H	0	Number	2	RW	U8	
	1	1.Mapped Object	60400010H	RW	U32	
	2	2.Mapped Object	60420010H	RW	U32	
	3	3.Mapped Object	0	RW	U32	
	4	4.Mapped Object	0	RW	U32	
1601H	0	Number	0	RW	U8	
	1	1.Mapped Object	0H	RW	U32	
	2	2.Mapped Object	0H	RW	U32	
	3	3.Mapped Object	0H	RW	U32	
	4	4.Mapped Object	0H	RW	U32	
1602H	0	Number	0	RW	U8	
	1	1.Mapped Object	0H	RW	U32	
	2	2.Mapped Object	0H	RW	U32	
	3	3.Mapped Object	0H	RW	U32	
	4	4.Mapped Object	0H	RW	U32	
1603H	0	Number	0	RW	U8	
	1	1.Mapped Object	0H	RW	U32	
	2	2.Mapped Object	0H	RW	U32	
	3	3.Mapped Object	0H	RW	U32	
	4	4.Mapped Object	0H	RW	U32	

Index	Sub	Definition	Initial value	R/W	Size	Note
1800H	0	Number	5	R	U8	
	1	COB-ID used by TXPDO	00000180H+NodeID	RW	U32	
	2	Transmission Type	5	RW	U8	01-240:Cyclic & Synchronous 254: Asynchronous 255: Asynchronous
	3	Inhibit time	0	RW	U16	Unit: 100us Set the integer multiples of 10.
	4	CMS-Priority Group	3	RW	U8	
	5	Event timer	0	RW	U16	Unit: 1ms
1801H	0	Number	5	R	U8	
	1	COB-ID used by TXPDO	80000280H+NodeID	RW	U32	
	2	Transmission Type	5	RW	U8	01-240:Cyclic & Synchronous 254: Asynchronous 255: Asynchronous
	3	Inhibit time	0	RW	U16	Unit: 100us Set the integer multiples of 10.
	4	CMS-Priority Group	0	RW	U8	
	5	Event timer	0	RW	U16	Unit: 1ms
1802H	0	Number	5	R	U8	
	1	COB-ID used by TXPDO	80000380H+NodeID	RW	U32	
	2	Transmission Type	5	RW	U8	01-240:Cyclic & Synchronous 254: Asynchronous 255: Asynchronous
	3	Inhibit time	0	RW	U16	Unit: 100us Set the integer multiples of 10.
	4	CMS-Priority Group	0	RW	U8	
	5	Event timer	0	RW	U16	Unit: 1ms
1803H	0	Number	5	R	U8	
	1	COB-ID used by TXPDO	80000480H+NodeID	RW	U32	
	2	Transmission Type	5	RW	U8	01-240:Cyclic & Synchronous 254: Asynchronous 255: Asynchronous
	3	Inhibit time	0	RW	U16	Unit: 100us Set the integer multiples of 10.
	4	CMS-Priority Group	0	RW	U8	
	5	Event timer	0	RW	U16	Unit: 1ms

Index	Sub	Definition	Initial value	R/W	Size	Note
1A00	0	Number	2	RW	U8	
	1	1.Mapped Object	60410010H	RW	U32	
	2	2.Mapped Object	60430010H	RW	U32	
	3	3.Mapped Object	0	RW	U32	
	4	4.Mapped Object	0	RW	U32	
1A01	0	Number	0	RW	U8	
	1	1.Mapped Object	0H	RW	U32	
	2	2.Mapped Object	0H	RW	U32	
	3	3.Mapped Object	0H	RW	U32	
	4	4.Mapped Object	0H	RW	U32	
1A02	0	Number	0	RW	U8	
	1	1.Mapped Object	0H	RW	U32	
	2	2.Mapped Object	0H	RW	U32	
	3	3.Mapped Object	0H	RW	U32	
	4	4.Mapped Object	0H	RW	U32	
1A03	0	Number	0	RW	U8	
	1	1.Mapped Object	0H	RW	U32	
	2	2.Mapped Object	0H	RW	U32	
	3	3.Mapped Object	0H	RW	U32	
	4	4.Mapped Object	0H	RW	U32	

- Supporting parameter index:

The definition here is for the setting related to the parameters of inverters. Please refer to the details below for the setting method:

The parameter index is corresponded according to regularity as below:

Index	sub-index
2000h + P parameter number	0

Example: We want to operate on parameter P.10:

Index	sub-index
2000h + 0Ah	0

Therefore, the operated Index will be 200Ah and sub-index will be 0.

- DSP402 (speed mode):

Index	Sub	Definition	Initial value	R/W	Size	Unit	PDO Map	Note
6007h	0	Abort connection option code	2	RW	S16		Yes	0:No action 1:malfunction 2:Disable Voltage
603Fh	0	Error code	0	RO	U16		Yes	
6040h	0	Control word	0	RW	U16		Yes	
6041h	0	Status word	0	RO	U16		Yes	
6042h	0	VI target velocity	0	RW	S16	rpm	Yes	
6043h	0	vl velocity demand	0	RO	S16	rpm	Yes	
6044h	0	vl control effort	0	RO	S16	rpm	Yes	
604Fh	0	vl ramp function time	10000	RW	U32	1ms	Yes	
6050h	0	vl slow down time	10000	RW	U32	1ms	Yes	
605Ah	0	Quick stop option code	1	RW	S16		No	0:disable drive function 1:slow down on slow down ramp 5:slow down on slow down ramp and stay in QUICK STOP
605Ch	0	Disable operation option code	1	RW	S16		No	0: Disable drive function 1: Slow down with slow down ramp; disable of the drive function
6061h	0	Mode of operation display	2	RO	S8		Yes	

4. CANopen Fault Code

Display	Description	CANopen Fault Code
OC1	Over-current during acceleration	2213H
OC2	Over-current at constant speed	2214H
OC3	Over-current during deceleration	2213H
OC0	Over-current when stop	2310H
OV1	Over-voltage during acceleration	3210H
OV2	Over-voltage at constant speed	3210H
OV3	Over-voltage during deceleration	3210H
OV0	Over-voltage when stop	3210H
THT	Overheated IGBT module	4300H
THN	Overheated motor	4000H
FAN	Cooling fan alarm	FF00H
OHT	External thermal relay operation	7120H
OPT	Abnormal peripheral devices	7500H
EEP	Abnormal memory	5530H
PID	Abnormal PID	7300H
CPU	Abnormal CPU	6000H
OLS	Stall prevention and protection	8311H
SCP	Short circuit over-current	2320H
NTC	Overheated module	4310H
NTC2	Overheated module2	4310H
NTC3	Overheated module3	4310H
NTC4	Overheated module4	4310H
NTC5	Overheated module5	4310H
NTC6	Overheated module6	4310H
NTC7	Overheated electrolytic capacitor	4310H
NTC8	Overheated start resistor	4310H
OL2	Abnormal over-torque	8311H
BE	Abnormal brake-resistor	7110H
IPF	Abnormal power supply input	5100H
CPR	Abnormal CPU	6010H
AEr	Abnormal 4-5 terminal	7110H
PG1	Abnormal encoder model	7301H
PG2	Abnormal PG card feedback signals	7301H
PG3	Too large speed deviation under closed-loop control	7301H
PTC	Overheated motor	4000H
BEB	Material line breaking	FF01H
DV1	Z pulse fault	7301H
DV2	Z pulse noise detection	7301H
DV3	Inversion detection	7301H

Canopen Supporting Index

Display	Description	CANopen Fault Code
DV4	Inversion prevention detection	7301H
EbE	Expansion card abnormal	FF02H
GF	Output ground fault	2330H
SAF	Safety circuit abnormal	FF03H
LF	Three- phase output abnormal	2300H
HDC	Hardware detection error	FF04H
ADE	Three-phase current sampling abnormal	5210H
rAE	Relay on the main circuit is abnormal.	7110H
CBE	Expansion communication card is disconnected	8130H